Bright Green Connect PXH-240-V

Features

- Supply Voltage: 180~528Vac or 250-740Vdc
- 10kV Surge Immunity
- PWM Output Frequency >1kHz
- 100,000 Hour Life @ Tc=75°C
- 7 Year Warranty @ Tc<=75°C
- 0-10V/PWM/DALI Dimmable
- 2% Minimum Dimming Output
- Dim Off with 0.5W Standby Power (Model Dependant)
- 12V 300mA Auxillary Power (Model Dependant)
- Input Over Voltage Protection (Optional)
- ENEC/CB/CCC SELV Output
- UL Class P Version available
- Safety according to EN 61347-1, 61347-2-3, 61347-2-13, 62384

Model List

Model Number	Input Voltage Range	Output Power	Output Voltage	Output Current Min	Output Current Max	Certification
PXH-240-V024-XYZ	180 ~ 528Vac	240 W	24V	0	10A	CB/ENEC/CCC
PXH-240-V048-XYZ	180 ~ 528Vac	240 W	48V	0	5A	CB/ENEC/CCC

Options List

XY=	Dimming Method	Programmable	12Vaux	Dim-off
Blank	-	-	-	-
D	0-10V	-	-	✔
E	0-10V	-	✔	✔
A	DALI	-	-	✔
M	DMX	Set Address	-	✔

Z = Blank, VDE cable/Class I D, VDE cable/Class II (optional) U, UL cable (optional)

Tel +44 (0) 1932 497 992 Email contact@brightgreenconnect.com
Find out more at www.brightgreenconnect.com

© Bright Green Connect Limited

V18.2A

Bright Green Connect PXH-240-V

Technical Data

Input Voltage	180~528Vac or 250V-740Vdc
Input Frequency	47~63Hz
Power Factor	>0.9 @ 60-100% load, refer to PF vs. Load curve
THD	<15% @ 60-100% load, refer to THD vs. Load curve
Input Current	1.1A max @ 277Vac & Full Load 0.65A max @ 480Vac & Full Load
Inrush Current	65A peak, 1.2ms duration, <0.25A2s @ 277Vac, Cold Start 70A peak, 1.3ms duration, <0.5A2s @ 480Vac, Cold Start
Leakage Current	1mA max @ 277Vac 60Hz, 0.75mA max @ 240Vac 50Hz
Input Under Voltage	Shut down and auto-recovery
Input Over Voltage	*Optional: Shutdown @ 320Vac
Surge Protection	Line to line 6kV, line to ground 10kV
Voltage Accuracy	±3% Io
Setup Time	1.2s max.
Overshoot	10% Vo max.
Output Over Current	120% Io, typ.
Short Circuit	Auto recovery. The output recovers when short is removed.
Over Temperature	Lower the output current when Tc≥105±10°C; Auto recovery when Tc≤70±10°C
Operating Temperature	-40°C~+70°C; 10%RH~100%RH
Storage Temperature	-40°C~+85°C; 5%RH~100%RH
MTBF	≥280,000 hours, 75°C case temperature (MIL-HDBK-217F)
Lifetime	≥100,000 hours, 75°C case temperature (refer to Lifetime vs. Tc curve)
Case Temperature	90°C max, marked on the Tc point of label
Dimensions	8.82 x 2.68 x 1.51" (body), 9.88 x 2.68 x 1.51" (endcaps included) 224 x 68 x 38.5mm (body), 251 x 68 x 38.5mm (endcaps included)
Net Weight	1600g
Packing	10pcs/Carton/19kg, 500 x 370 x 335mm

Notes:
Unless specified, all the test results are measured @25°C ambient

Tel +44 (0) 1932 497 992 Email contact@brightgreenconnect.com
Find out more at www.brightgreenconnect.com

© Bright Green Connect Limited

Bright Green Connect PXH-240-V

Dimming

Parameter	Min.	Typ.	Max.
Vdim Sourcing Current	200uA	300uA	450uA
Vdim Allowed Input Voltage	-20V	-	20V
0-10V Dimming Range	2% (Vdim=1V)	Linear	100% (Vdim=9-10V)
PWM Dimming Range	2% (Duty=10%)	Linear	100% (Duty=90-100%)
Dim off threshold	0.4V or 4%	0.5V or 5%	0.6V or 6%
Dim on threshold	0.6V or 6%	0.7V or 7%	0.8V or 8%
PWM High	3V	-	10V
PWM Low	0V	-	0.6V
PWM Frequency	300Hz	-	2kHz
External PWM Controller Current Sinking Capability	300uA	-	-
DALI Interface Standard	IEC62386		
DA1, DA2 High Level	9.5	16	22.5
DA1, DA2 Low Level	-6.5	0	6.5
DA1, DA2 Current	0	-	2mA

Tel +44 (0) 1932 497 992 Email contact@brightgreenconnect.com
Find out more at www.brightgreenconnect.com

© Bright Green Connect Limited

Bright Green Connect PXH-240-V

Dimming Curve

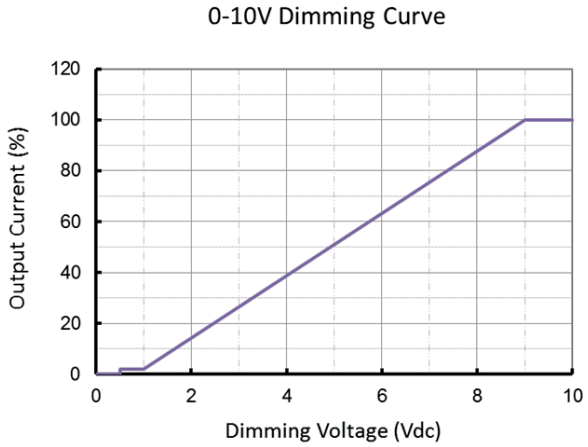

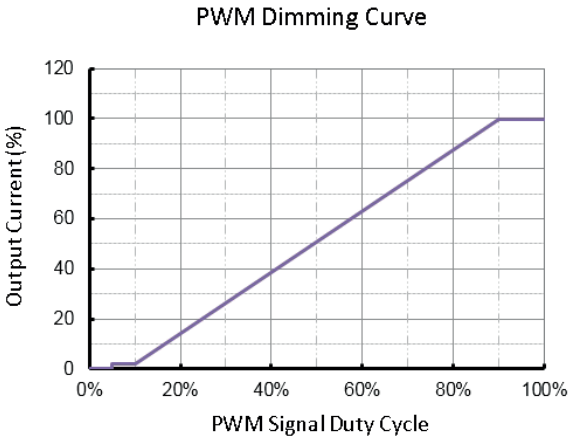

Dimming Wiring

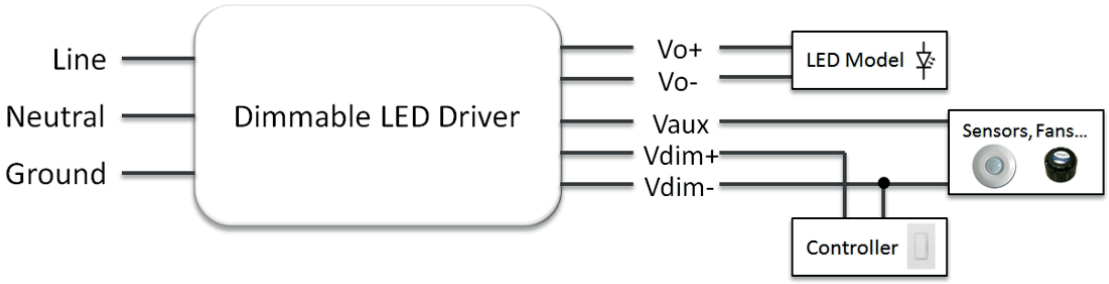

Push (Switch) Dim

Short press (50-600 ms) switches the device on or off

Long press (> 600 ms) fades the connected operating device alternately up and down (between 2 and 100%). Up and down slew rate is 20%lo/second.

Long push for 15s to synchronize.

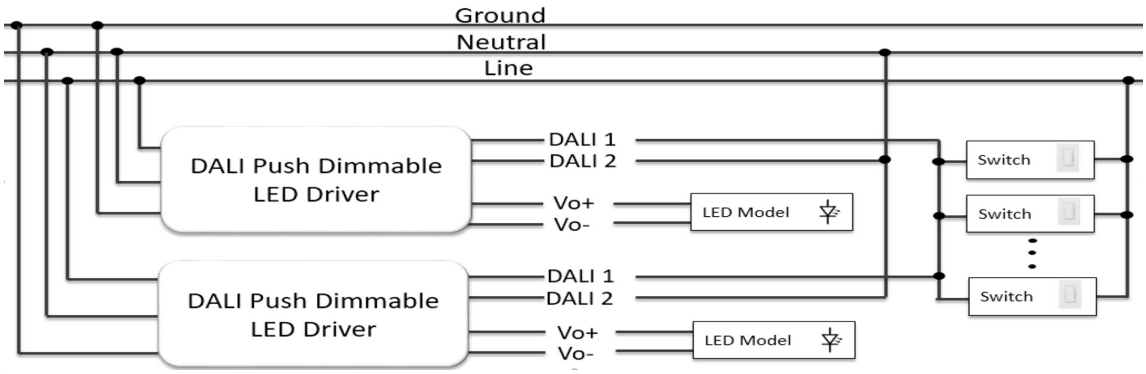

Tel +44 (0) 1932 497 992 Email contact@brightgreenconnect.com
Find out more at www.brightgreenconnect.com

© Bright Green Connect Limited

Bright Green Connect PXH-240-V

Safety/EMC Compliance

Safety Standard	Description
IEC 61347-1	Lamp control gear Part 1: general and safety requirements
IEC 61347-2-13	Lamp control gear Part 2-13: particular requirement for d.c. or a.c. supplied electronic control gear for LED modules
EMI Standards	Description
IEC 55015	Conducted emission test & radiated emission test
IEC 61000-3-2	Harmonic current emissions; Class C
IEC 61000-3-3	Voltage fluctuations & flicker
EMS Standards	Description
IEC 61000-4-2	Electrostatic discharge (ESD): 8 kV air discharge, 4 kV contact discharge
IEC 61000-4-3	Radio frequency electromagnetic field susceptibility test (RS)
IEC 61000-4-4	Electrical fast transient (EFT)
IEC 61000-4-5	Surge immunity test
IEC 61000-4-6	Conducted radio frequency disturbances test (CS)
IEC 61000-4-8	Power frequency magnetic field test
IEC 61000-4-11	Voltage dips
IEC 61547	Electromagnetic immunity requirements applies to lighting equipment

Tel +44 (0) 1932 497 992 Email contact@brightgreenconnect.com
Find out more at www.brightgreenconnect.com

© Bright Green Connect Limited

Bright Green Connect PXH-240-V

Lifetime vs. Case Temperature

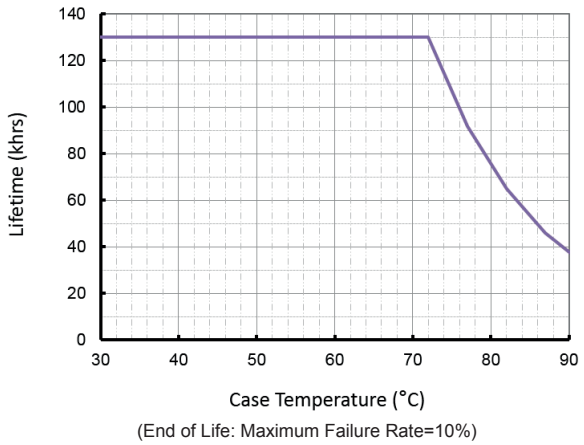

(End of Life: Maximum Failure Rate=10%)

Power Factor vs. Load

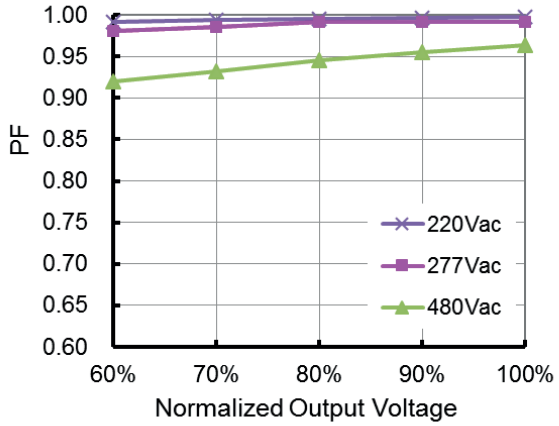

THD vs. Load

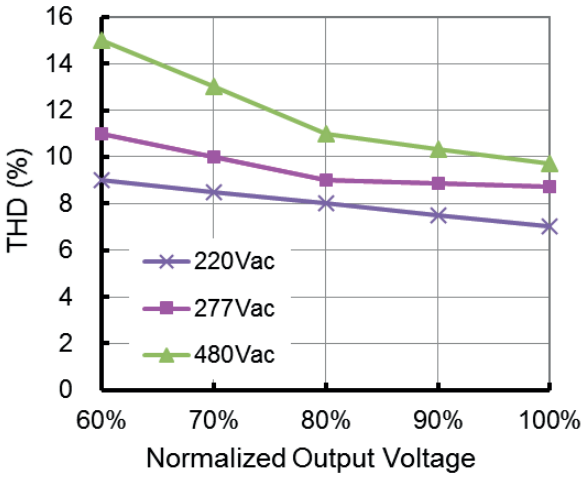

Efficiency vs. Load (24V Model)

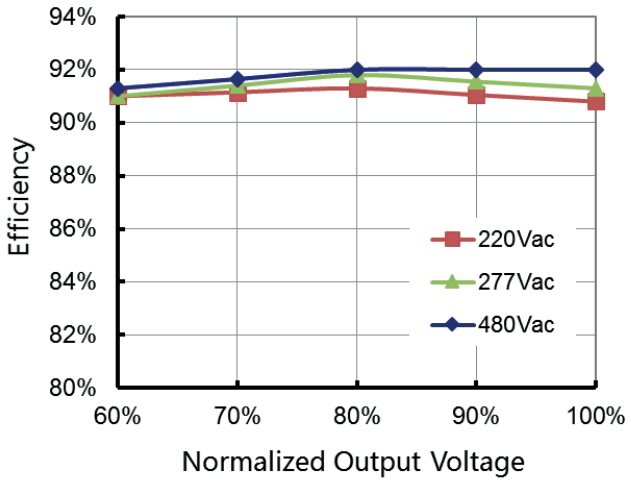

Tel +44 (0) 1932 497 992 Email contact@brightgreenconnect.com
Find out more at www.brightgreenconnect.com

© Bright Green Connect Limited

Bright Green Connect PXH-240-V

Mechanical Design

PXH-240-Vxxx

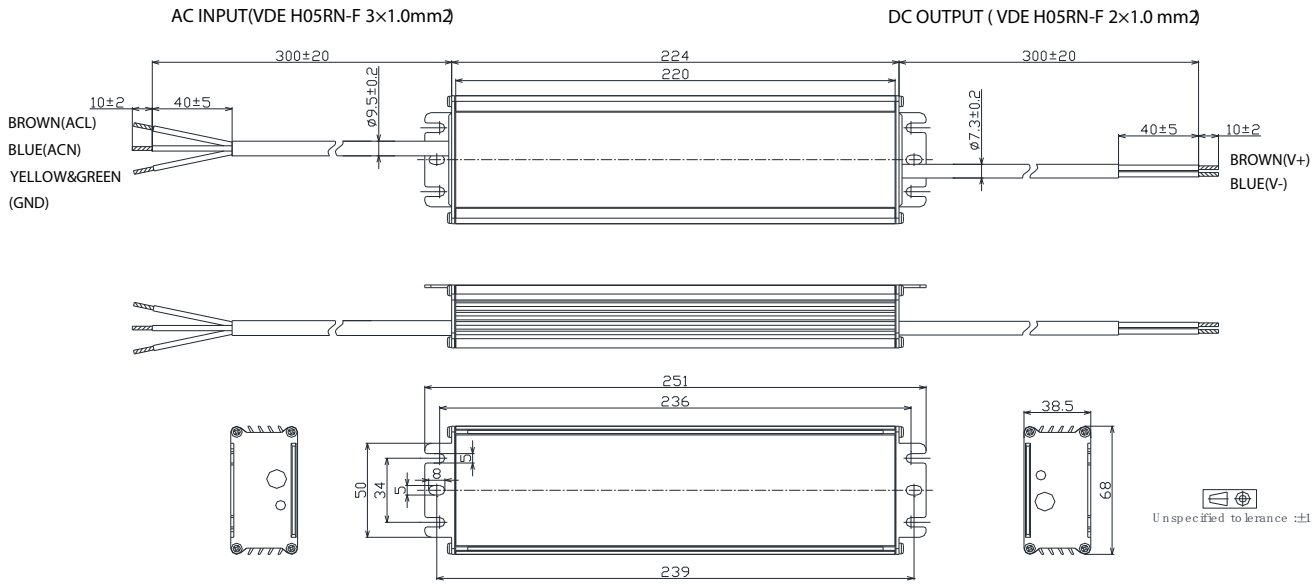

PXH-240-Vxxx-E

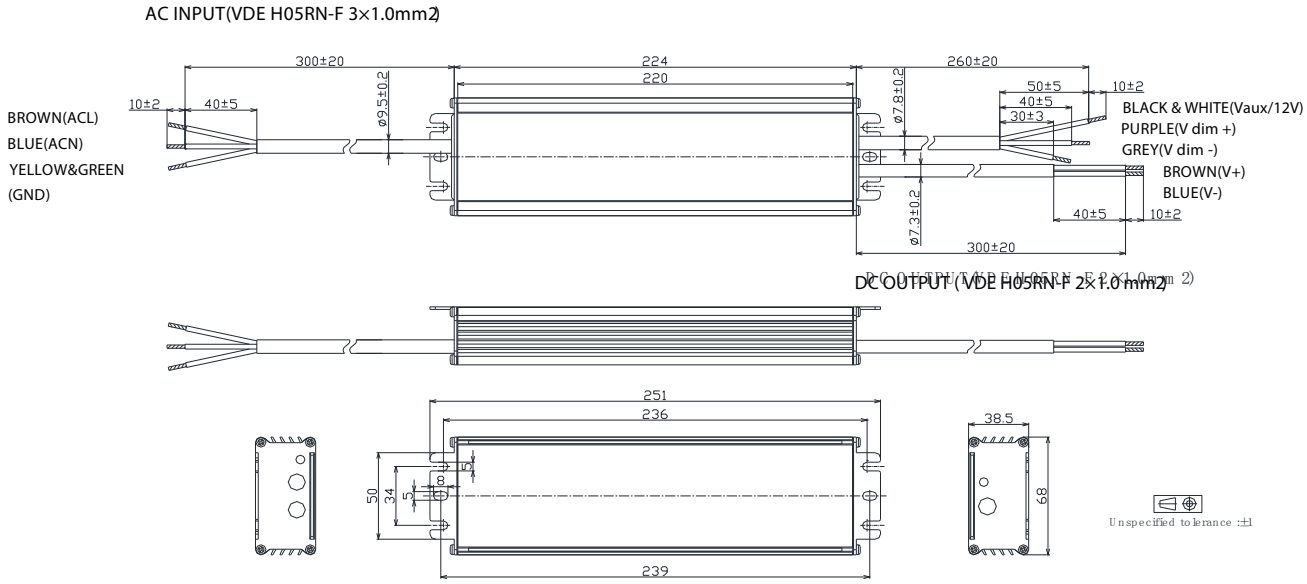

Tel +44 (0) 1932 497 992 Email contact@brightgreenconnect.com
Find out more at www.brightgreenconnect.com

© Bright Green Connect Limited

Bright Green Connect PXH-240-V

Mechanical Design

PXH-240-Vxxx-A

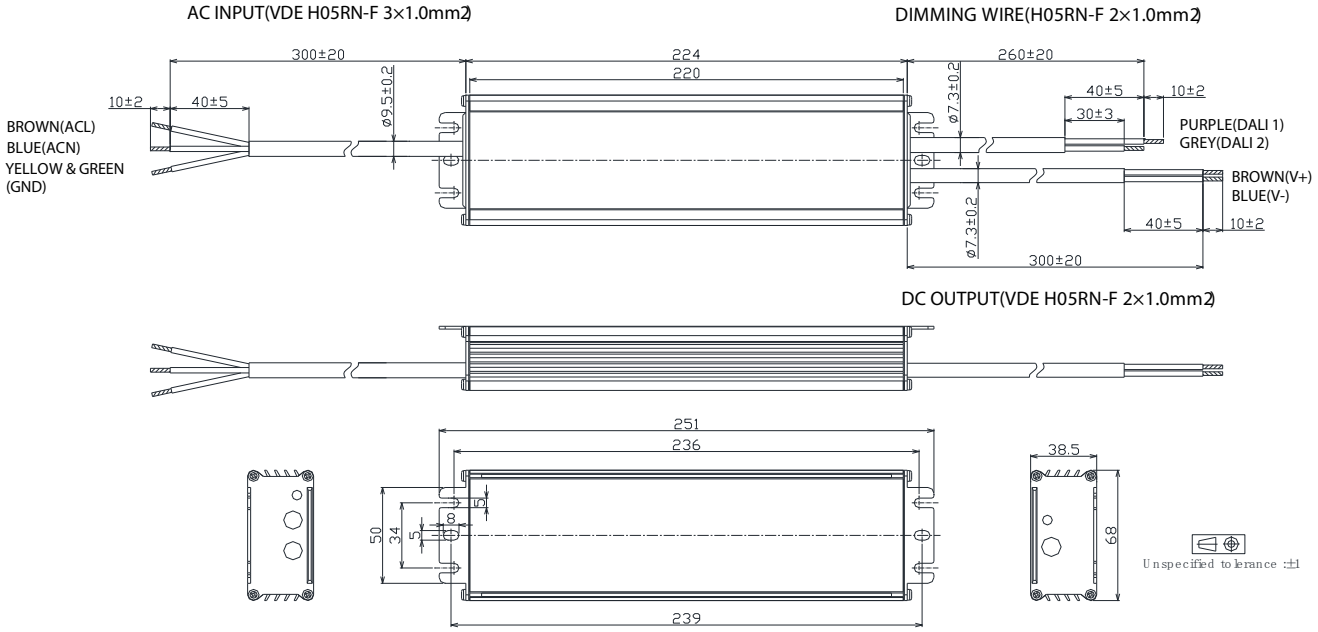

PXH-240-Vxxx-M

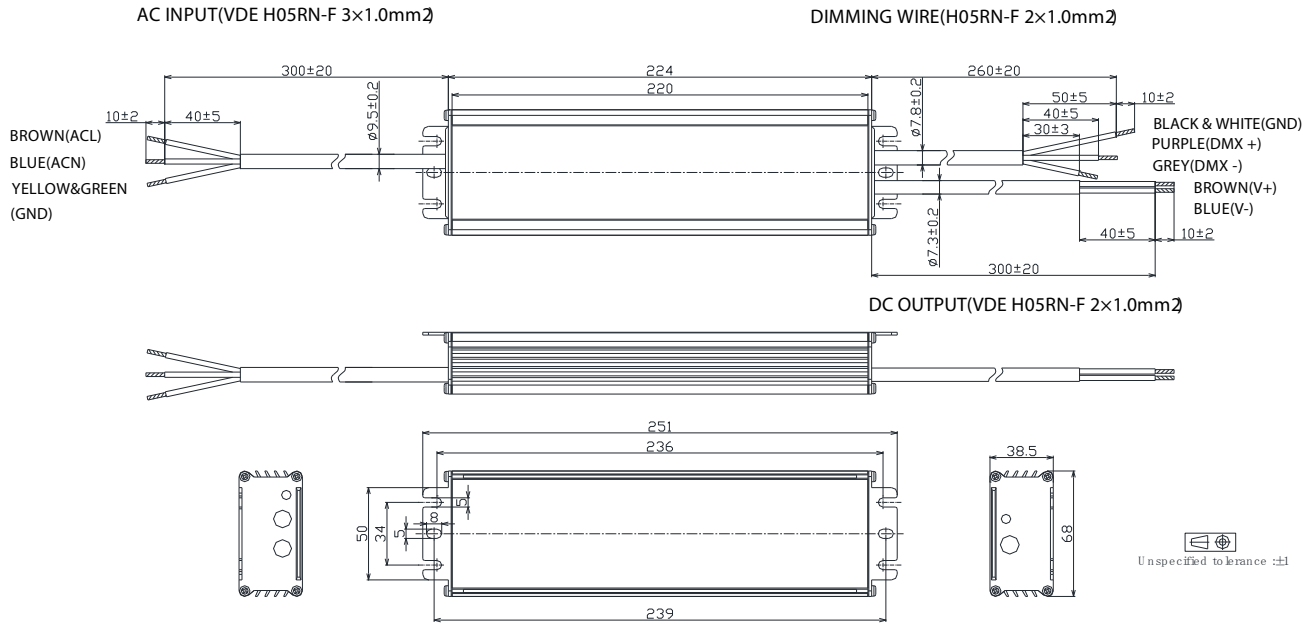

Tel +44 (0) 1932 497 992 Email contact@brightgreenconnect.com
Find out more at www.brightgreenconnect.com

© Bright Green Connect Limited